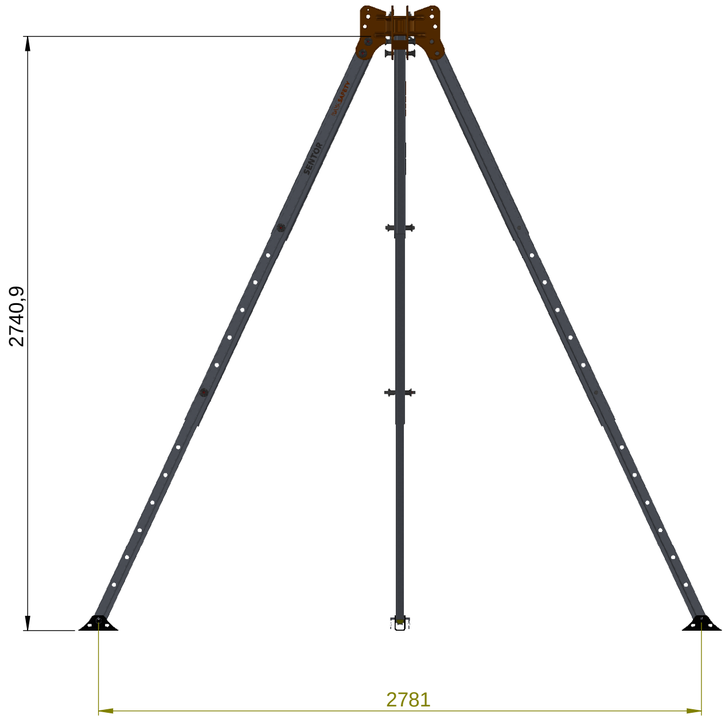


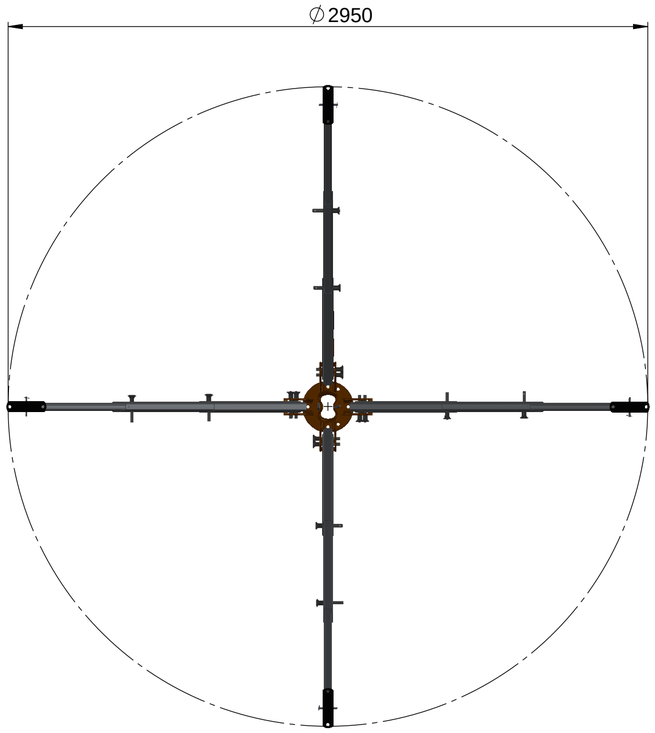


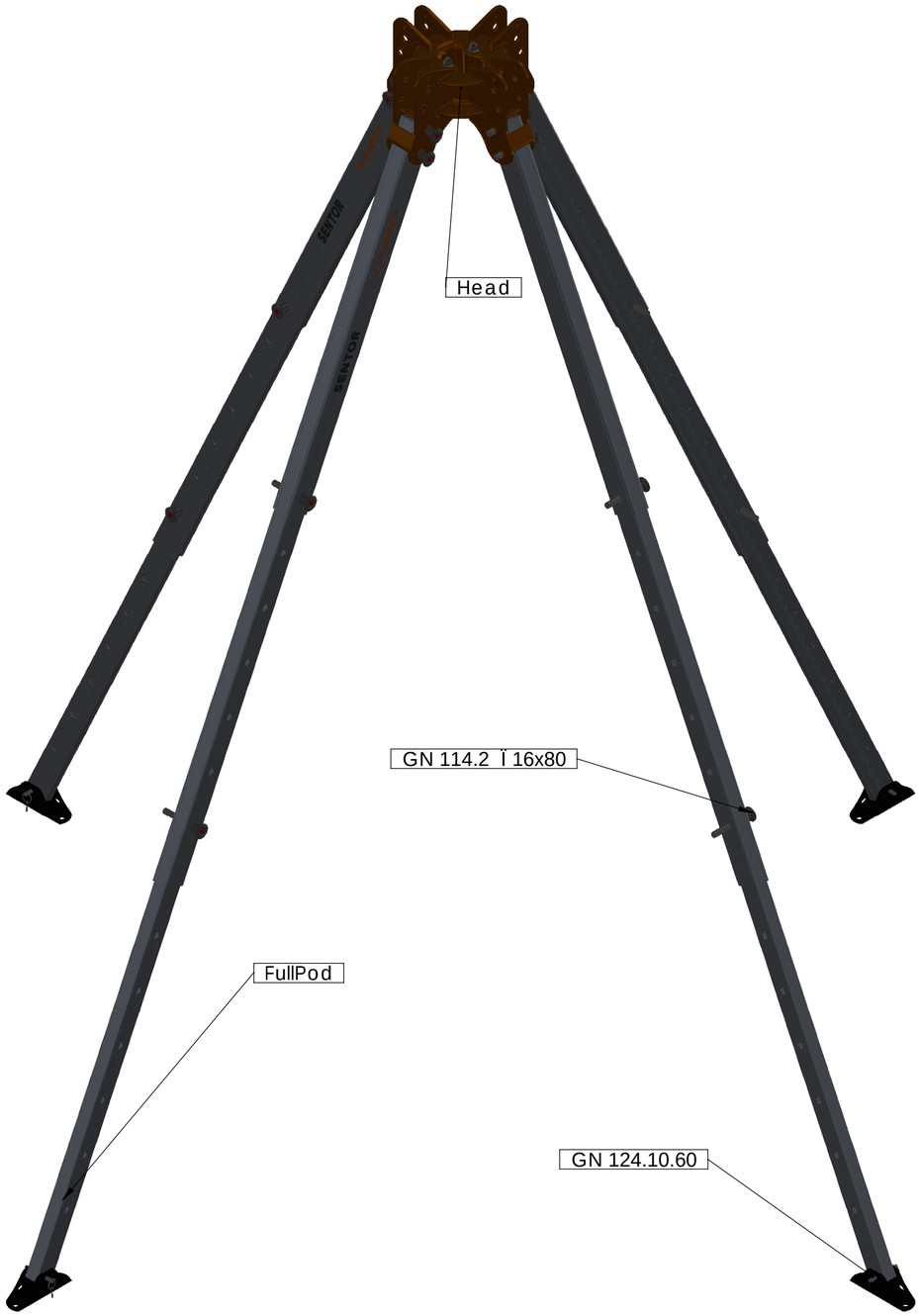


| Item No | Part Name | Description | Qty. |
|---|---|---|---|
| 1 | Head | Casting Aluminium | 1 |
| 2 | FullPod | Aluminium | 4 |
| 3 | GN 124.10.60 | Elesa Ganter Pre-Galvanised Push Button QuickRelease Pin | 4 |
| 4 | GN 114.2 Ï 16x80 | Elesa Ganter Pre-Galvanised QuickRelease Pin | 8 |

EYS.F.121 |25.02.2015 |Rev.01

RESİM / ZERKEDEN Y.L.E. ALINMAYACAKTIR.
DO NOT SCALE IN THIS DRAWING.

Bu resim KAYA dan izin almadan, çoğaltamaz, dağıtamaz, Adi ve kopyalar F. Ticaret Kanunu'nun ilgili maddesinin ihlalidir. Ve hukuki yaptırımlar uygulanır.

All proprietary rights reserved by KAYA this drawing shall not be reproduced or in any way utilized, for the manufacture of the component or for any other purpose nor shall it be handed over to a third party without written consent. Any infringement will be legally pursued.

| MALZEME MATERIAL | REV. NO REVISION NO | REVİZYON TARİHİ REVISION DATE | REVİZYON NEDENİ REASON FOR REVISION | | SAYFA PAGE |
|---|---|---|---|---|---|
| AISI 304 | | | | | 1 |
| YÜZEY İŞLEMİ SURFACE TREATMENT | | ADI SOYADI FULL NAME | TARİH DATE | İMZA SIGNATURE | ÖLÇÜLER DIMENSIONS |
| | ÇİZEN DRAWN | BURHAN AYDIN | 20/10/2015 | B/A | mm cm in |
| AĞIRLIK WEIGHT | KONTROL CONTROLLED | | | | |
| | ONAY APPROVE | | | | |
| STANDART NO STANDARD NO | PARÇA ADI VE KODU PART NAME AND CODE | | | | |
| KULLANIM YERİ PLACE OF USE | | | | | |

KAYA